SAFED

industrial furnace solutions

Belt furnace Type T

Hardening, case-hardening, carbonitriding, ...

Reliability at work

Aichelin

BELT FURNACE TYPE T

Optimized concept

Our belt furnace Type T is based on a stand-alone design that has proven itself in hundreds of facilities. A gastight socket and a movable base are important parts of the effective SAFED construction. Constant enhancement and advancing our range of services have made for an entire spectrum of progressive plants with numerous different versions. Our furnace capacities range from small to large production. Customers can also choose between electric and gas-fired heating.

The modern heat treatment of mass parts made of steel poses a challenge to the operational process requirements, but the SAFED belt furnace Type T meets that challenge like no other.

Its construction principle and a plethora of unique technical solutions guarantee the following for the user:

- Safe compliance with treatment parameters
- Reproducible, high quality despite tight tolerances
- Safe investment thanks to the plant's longevity
- Economic efficiency due to affordable operational cost and flexibility
- environmentally friendly thanks to low energy and resource consumption

The Type T furnace is designed for continuous heat treatment in large-scale and small-scale production in continuous operation. It can be optimally integrated into the process of batch production.

High precision and reproducibility of the results enable metallurgic and mechanic properties for a wide range of parts. The plant is especially suitable for the production of:

- Mass parts for the automotive industry
- Screws and other fastening parts
- Roller bearing parts
- Stamped- and deep drawn parts
- Parts for drive chains
- Tools such as saw blades, drills, screwdrivers
- any type of small parts

All process parameters of the Type T furnace can be controlled with high precision. This way, the plant can be equipped for a plethora of heat treatment processes.

- Hardening with oil, water, or polymer quenching
- Case hardening; carburizing, and car bonitriding
- Bainite and martensite hardening with salt quenching
- Nitro-carburizing according to the SAFED OXYCAD® process

For an automated process flow, the Type T range can easily be linked to other parts of the plant. Naturally, we can also provide the complete line from one source.

Type T plant 80/54 for carbonitriding screws; throughput rate approx. 370 kg/h; gas-heated.

BELT FURNACE TYPE T

Type T furnaces are suitable for the protective-gas treatment of metal serial parts that have to meet high quality standards.

The sophisticated construction of the plant and the use of extensive measurement and control technology guarantee precise and reproducible control of all treatment parameters.
The gastight socket made of heat-resistant stainless steel is required to ensure defined protective-gas treatment. It is the centerpiece of the zone-regulated heating chamber and will ensure a stable atmosphere in no time.

Another advantage of this type of plant is the specific belt feed system. It adds to the durability of the belts, and it ensures precise and reproducible adjustment of the process times. The entire design of the plant offers an economical and environmentally friendly solution for the specific heat treatment of high-quality serial parts.

Heating system

Electric and gas-fired furnaces are both part of the SAFED program.

A strong circulating air flow evolves inside heating chambers with gas-fired furnaces, caused by several high-speed burners. We prefer to use burners from leading suppliers, with recuperators and state-of-the-art technology.

The NOXMAT ETAMAT high-speed burner is one of them; it has an integrated metal foam recuperator for highest possible heat recovery and a firing efficiency of up to 90%.

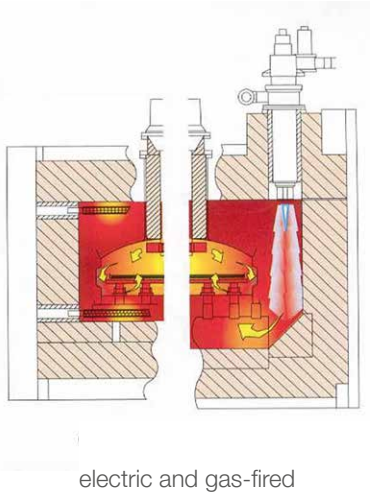

electric and gas-fired

BELT FURNACE TYPE T

Flame curtain
Flame curtain with pilot burner and flame monitoring.

Insulation
High-quality material composite made from lightweight, refractory insulation materials, which minimizes thermal loss and guarantees rapid heat-up.

Atmosphere fan (TURBO version)
For the most part, the plant is equipped with one or more gas atmosphere fans, which enable optimal control of the individual treatment zones. The turbo aggregates are gastightly flange-mounted onto the socket as a compact unit. The probes for measuring and control of carbon values as well as the inlets for the additional gas are in the same place.

Conveyor belt
Mesh belt made from heat-resistant alloys, in various versions depending on the type of parts.

Loading table
Orientation can be varied between regular loading and loading of bulk goods.

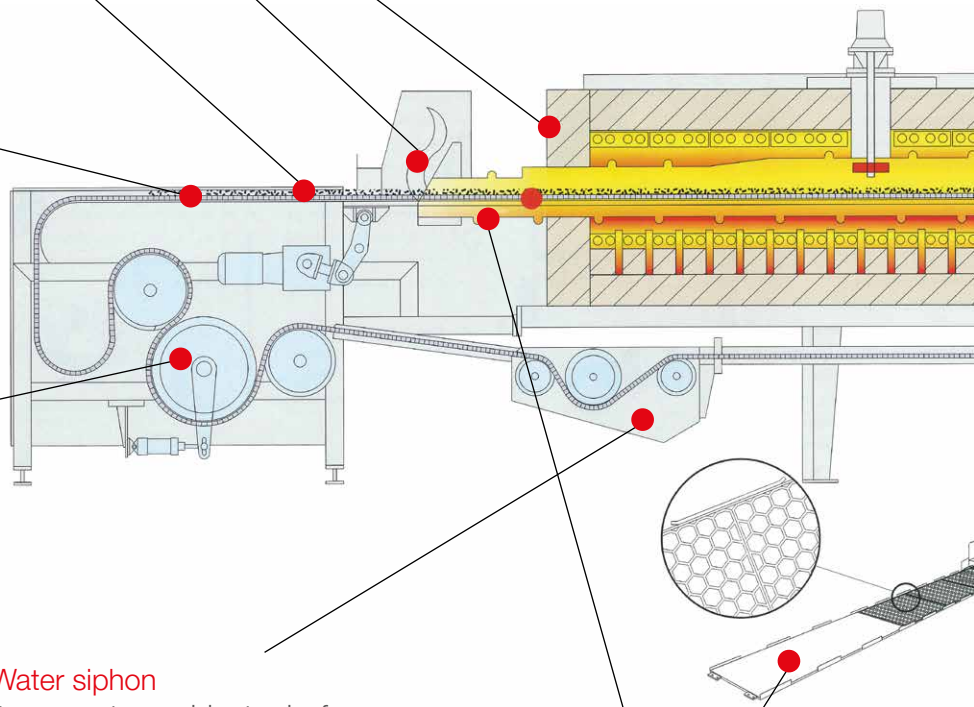

Driving mechanism
The driving mechanism was developed and patented by SAFED and creates a defined motion cycle of the conveyor belt. The movable base mounted on roller bearings is its distinguishing feature. With each fore stroke, the conveyor belt is virtually piggybacked through the operating chamber. This drive guarantees that the conveyor belt is never exposed to any tensile stress and passes through the socket space and the space where the belt itself reverses into the chute linearly. This reduces the belt's wear and tear considerably. All mechanical parts are located outside of the chamber and are never exposed to any thermal wear.

Water siphon
It prevents ambient air from entering the return duct.

Movable base
The part of the base inside the furnace consists of open elements in the shape of honeycombs. This enables ideal exposure to the gas flow from all sides of the material to be treated.

The targeted circulation ensures that all areas of the material to be treated are uniformly exposed to the gas atmosphere.

Heating system

Electric and gas-fired furnaces are both part of the SAFED program. In electrically heated plants, the heating elements are mounted onto ceramic pipes inside the furnace's base as well as onto the chute, which makes them easy to exchange. The chute heater prevents the parts from cooling down

There are several separately regulated zones, in which the heating elements guarantee high-precision temperatures. Excellent measuring and control technology ensures that temperature control is always in line with the desired temperature profile.

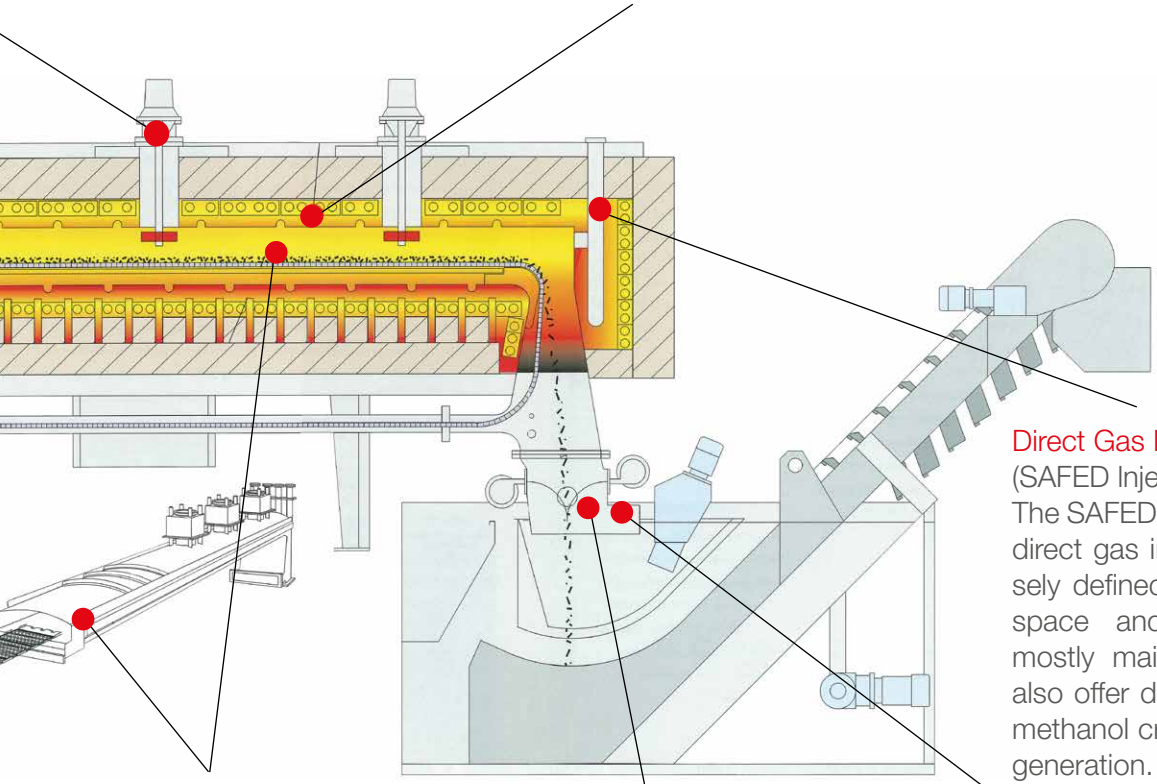

Direct Gas Injection

(SAFED Injector)
The SAFED Injector System for direct gas injection with precisely defined carrier gas saves space and energy and is mostly maintenance-free. We also offer different versions for methanol cracking or endogas generation.

Gastight socket

A gastight socket is an essential requirement for the target protective gas treatment. The socket made from heat-resistant stainless steel ensures that the treatment atmosphere stabilizes quickly. A necessary change in atmosphere can be made within minutes. The socket forms a hermetically sealed space.

Attached quenching tank

We offer a range of different versions of quenching tanks to be built in as standard features. For discharges, we offer numerous different solutions, among them a bucket chain or belt conveyors.

Fluid curtain

The fluid curtain created between chute and quenching tank prevents vapors from entering the socket.

BELT FURNACE TYPE T

System across the board

Depending on the type and material of the parts as well as on the used quenchant and its properties, we offer a whole range of quenching equipment in all performance categories.

Quenching equipment for oil, polymer or water

Standard features of any quenching equipment are level regulation, temperature control, heating and cooling, as well as targeted circulation of the quenchant.

Quenching equipment Type G

Our quenching equipment Type G is suitable for hardening a wide range of parts. Continuous discharge via bucket chain, conveyor belt or a version with magnetic conveyors. Different drop heights in oil, depending on the dimensions of the parts. Special design as a double basin for oil and water quenching or hot oil up to 200°C.

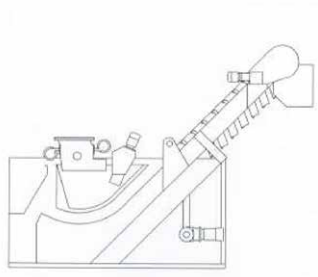

Quenching installation Type P

The SAFED “pump system” is suitable for hardening small or micro parts. A forced flow of the hardening fluid though a pipe enables the discharge of the parts. This leads to an optimal hardening uniformity, top quenching speed, and compact design.

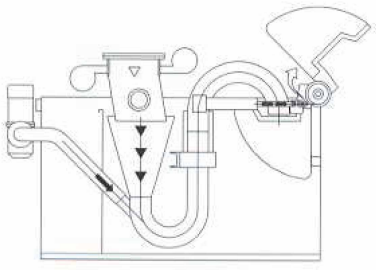

Salt bath quenching

Salt quenching also leads to high hardening uniformity, as there is no vapor phase. Basically, there are two procedures:

Bainite hardening (Austempering)

Bainite transformation is reached by quenching above Ms, between 250 and 400°C, and a certain retention period in this temperature range. Compared to conventional tempering and quenching with tempering, bainite hardening has the advantage of higher viscosity and fatigue strength, for instance with safety-related parts.

Martensite hardening

Quenching below Ms, between 160 and 250°C, at sufficient speed, for an entirely martensitic structure with low warpage.

Salt bath- Quenching equipment Type GS

The quenching equipment has been specially designed by SAFED and has a powerful heating and cooling system, excellent thermal insulation, and a heated, insulated cover over the parts discharge system, which prevents heat loss.

The entire construction, especially important functions such as bath heating, discharge, bath circulator, and curtain mechanism, consists of proven components that are specifically made for operation with salt. After salt quenching, the parts are rinsed in the water basin.

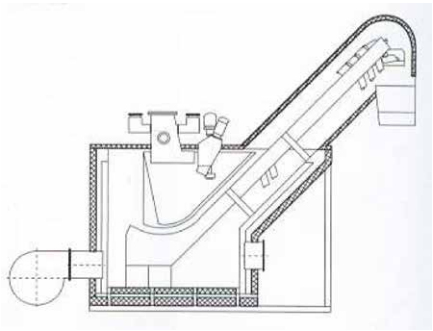

Protective gas atmosphere

Apart from the sophisticated SAFED furnace construction, which offers reproducible process control, we also offer production systems for all common types of protective gas.

Direct gas injection, SAFED Injector

The SAFED injector system for direct gas injection - Injector M for methanol cracking and Injector N for endogas generation - saves space and energy inside your furnace chamber.
A retort mounted to the end of the socket with separately controlled heating serves as a protective gas generator. This way, protective gas is immediately available and prevents the parts from cooling or the socket from sooting. The initial products are fed through an automatically controlled mixing station.

Conventional gassing, SAFED protective gas generator

At SAFED, we offer a complete range of conventional gas generators such as endo-thermic gas generators and methanol crackers for all common types of protective gas.

BELT FURNACE TYPE T

C-level control

Targeted circulation of the furnace atmosphere is a requirement for smooth C-level control. For this purpose, the furnace is equipped with either one gas atmosphere fan for tempering, or with several for case hardening (Safed Turbo System), which, combined with the measuring technology, guarantees optimal control of the individual treatment zones.
Probes for the carbon measurement devices and the inlets for the additive gas are mounted around the atmosphere fans.

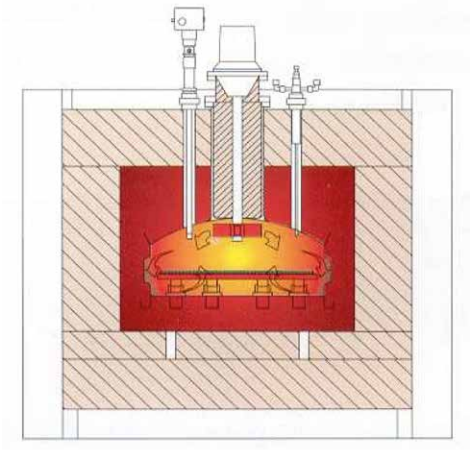

Oxygen probes have proven useful as an “in situ” measuring principle; otherwise, other marketable systems may be applied as well.
If using several turbo atmosphere fans, a clearly defined C-level profile can be set for the entire length of the furnace.

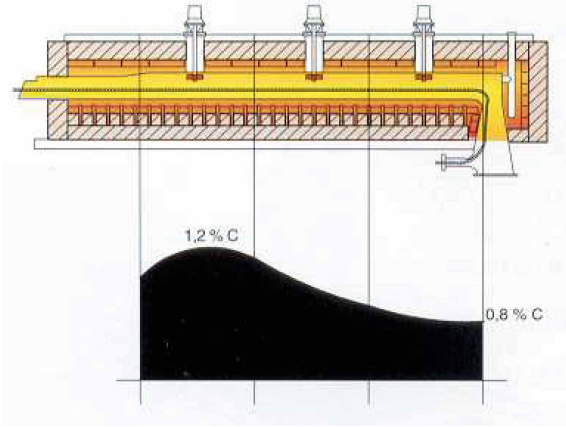

Automatic process control

To create a reproducible, automated process, all process parameters must be recorded and monitored. For this purpose, all SAFED plants have programmable logic controllers (PLC) from leading suppliers to regulate, control, and monitor the key parameters as standard features.
On a next level, a process control system can be used (loaded to your computer). The control system is connected to one or several of the furnace PLCs via “ethernet or Profinet”.

Safety precautions

The design of the type-T series complies with all EU directive regarding safety, and it fulfills all criteria regarding occupational and environmental safety.

The design is regularly adapted to the state of the art in technology, especially considering easy operation and maintenance.

Supplementary equipment for an integration into automatic heat treatment plants

The type T range can be linked to other plants to enable automatic process flow. Each plant is individually designed in line with the user-specific requirements and with the existing space in mind.

Heat treatment plant with automatic loading, degreasing machines before and after hardening, and a tempering furnace.

All items listed below are included into the SAFED supply range and fulfill top reliability requirements:

- Automatic loading equipment tailored to the type of parts and to the upstre am production process.
- Continuous degreasing machines, as drum or conveyor belt types, for cleaning parts in an aqueous solution before and after hardening.
- Belt tempering furnaces, with air cir culation or protective gas, precisely adapted to the performance of the individual hardening furnace.

SAFED
industrial furnace solutions

AICHELIN Ges.m.b.H.
Fabriksgasse 3
A-2340 Mödling
Tel.: +43 2236 23 64 60
Fax: +43 2236 22 229
marketing@aichelin.com

AICHELIN Service GmbH
Schultheiß-Köhle-Straße 7
D-71636 Ludwigsburg
Tel.: +49 7141 64 37- 0
Fax: +49 7141 64 37 -190
info.de@aichelin.com

www.aichelin.com

Technische Änderungen vorbehalten.
AICHELIN® ist ein eingetragenes Warenzeichen.
AWM/SAFED T/E/2003